2024(VI)

RELIABLE INDUSTRIAL

VALVE

Resilient Seated Gate Valves

- DN50/300
- PN10/16
- TYPE F4/F5 (EN558 S14/S15)
- BARE SHAFT FOR MANUAL OPERATION

Reliable INDUSTRIAL

Resilient seated gate valves

Reliable INDUSTRIAL

PRODUCT AND FUNCTIONAL

Resilient-seated gate valves for "OPEN - CLOSED" operation only. They comply with the European standard EN1171 and EN1074-2.

BARE SHAFT FOR MANUAL OPERATION

- Design: EN1074-2;
- Flange: EN1092-2;
- Face to face: EN558-1;
- Testing: EN12266-1;
- Coating: DIN 30677.
- SIZE: DN50-300;
- Working pressure PN10/16;
- Maximum temperature -20℃ - +80℃;
- Suitable for portable water, sewage;
- CE, WRAS, ACS, EN1074 APPROVAL.

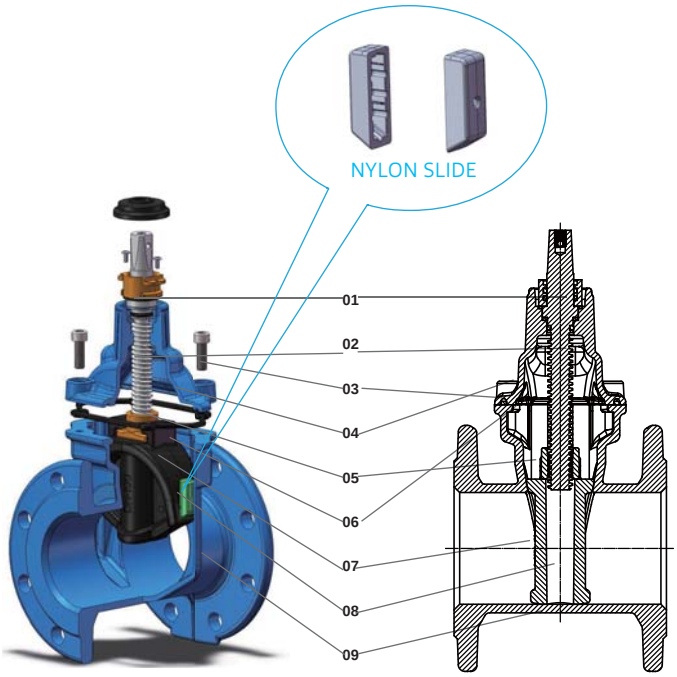

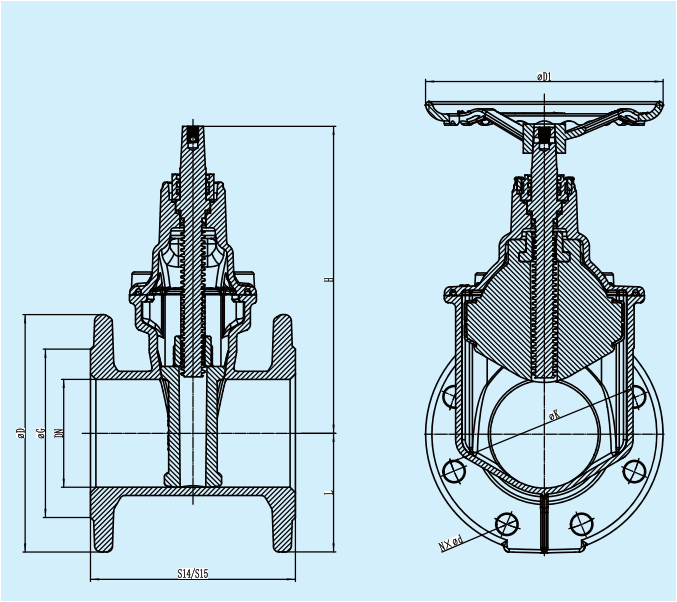

Assembly Chart

ITEM	DESCRIPTION	MATERIAL	OPTION
1	Stuffing nut	Brass	AL-bronze
2	Stem	X20Cr13	SS304/SS316
3	Bolt	GD8.8	A2/A4
4	Bonnet	EN GJS 500-7	
5	Driving nut	Brass	AL-bronze
6	GASKET	EPDM	
7	wedge	EN GJS 500-7+EPDM	GJS500-7+NBR
8	Nylon slide	Nylon66	
9	Body	EN GJS 500-7	

Specifications & Parameters Chart

	EN 1092-2 PN10					EN 1092-2 PN16					EN558(DIN3202)			
DN	D	K	G	n-d	n-M	D	K	G	n-d	n-M	S14/S15	H	D1	Nm
50	165	125	99	4x19	4xM16	165	125	99	4x19	4xM16	150/250	210	170	30
65	185	145	118	4x19	4xM16	185	145	118	4x19	4xM16	170/270	260	190	40
80	200	160	132	8x19	4xM16	200	160	132	8x19	4xM16	180/280	275	190	60
100	220	180	156	8x19	8xM16	220	180	156	8x19	8xM16	190/300	310	220	70
125	250	210	184	8x19	8xM16	250	210	184	8x19	8xM16	200/325	375	240	80
150	285	240	211	8x23	8xM20	285	240	211	8x23	8xM20	210/350	400	240	90
200	340	295	266	8x23	8xM20	340	295	266	8x23	12xM20	230/400	485	285	120
250	400	350	319	12x23	12xM20	400	355	319	12x23	12xM24	250/450	575	350	180
300	455	400	370	12x23	12xM20	455	410	370	12x23	12xM24	270/500	660	350	200

FUNCTIONAL DESCRIPTION AND ALLOWABLE OPERATION

HYDROSTATIC TEST-F4(PN10/16)

DN	hydrostatic test		Weight(kg)	
	body	seal	F4	F5
50	15/24	10/16	9.2	9.8
65(1)	15/24	10/16	13.4	14.2
80(1)	15/24	10/16	14.2	15.6
100	15/24	10/16	17.1	18.9
125	15/24	10/16	26.5	29.0
150	15/24	10/16	30.0	34.0
200	15/24	10/16	50.4	58.6
250	15/24	10/16	68.3	79.1
300	15/24	10/16	95.1	116.1

(1)on request: DN65 can be drilled to DN60 and DN80 can be drilled 4 holes.
*Each product are individually tested on production line before delivery.
*The strength and tightness of the gate valves are tested in the manufacturing factory according to EN 12266 and EN 1074-2.

HEAD LOSS COEFFICIENT

At a temperature of 20°C, the head loss through the valves are defined by the following formula:

$$\Delta P = \left(\frac{Q}{Kv} \right)^2$$

With:

ΔP = head loss of the valve in Bar,

Q = flow in the valve in m³/h,

Kv = head loss coefficient.

See value by DN in the table below. "Kv" express the value of the flow (in m³/h), at a temperature of 20°C, that pass through the valve by generating a head loss of 1 Bar.

DN	Kv
50	450
65	760
80	1160
100	1910
150	4580
200	8260
250	13730
300	19400

TORQUE AND Num.OF TURNS

DN	Normal Closing Torque(2)(in Nm)	Maximum Operating Torque (MOT) according to EN1074-2(1) (in Nm)	Minimum Strength Torque (MST) according to EN1171(1) (Nm)	Number of turns for Opening or Closing (full stroke)
50	30	50	180	14
65	40	65	225	15
80	60	80	225	17
100	70	100	300	21
125	80	125	375	33
150	90	150	450	37
200	120	200	600	42
250	180	250	750	43
300	200	300	900	51

(1) For gate valves to be operated by Handwheel.
(2) The values are the normal closing torque values of our resilient seated gate valves with clean water and at room temperature, for a product delivered.

ALLOWABLE OPERATION

Operation of each gate valve is performed through rotating motion of the stem with an appropriate operating element .
The appropriate operating element should only be used for the recommended torque values according to Table , otherwise the valve might be damaged. When turning the valve stem, the wedge moves up or downwards, along the threaded part of the stem,in order to open or close the passage.

Depending regions, countries or customers, the valve is closed by turning the operating element:

- To the right, i.e. in a clockwise direction.
- To the left, i.e. in an anti-clockwise direction.

Captop (square cap)

Handwheel

Extension Spindle (Adjusted - Length)

Extension Spindle (Fixed - Length)

Advantage

Reliable Valve	Others
1. With special stuffing nut design, to avoid nut push out.	Others normal design gland nut is easy pull out.
2. With round flange edge design to avoid coating break dduring asssembly and transport.	Others normal gate valve sharp edge flange end.very easy break the coating during assembly and transport.
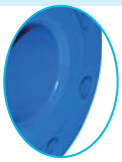	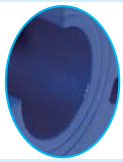
3. With chamfer design on the edge of path in order to approve holiday test easily	Others normal design is sharp edge,very easy wo break the coating and difficult to approve holiday test of coating.

4. The coating powder with WRAS/ACS/WATERMARK/KTW/GSK approved.

5. With Male guide on the wedge, increases wear resistance and reduces the operaton torque. Could enlarge the flow rate.

6. Rubber with WRAS and ACS approved for potable water use. With KTW approved.

7. All casting was produce by Sinto/DISA autommatic line with good surface quality.

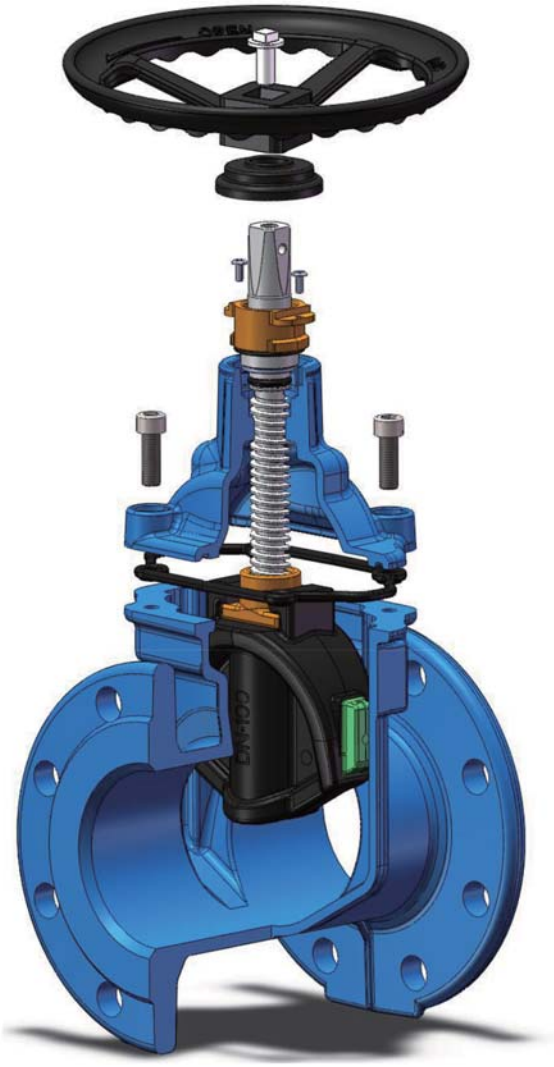

Water System
Valve

Water System
Pipe Fitting

Power Line System
Fitting

Fire System
Hydrant/Fitting

COMMERCIAL: DALIAN RELIABLE INDUSTRIAL CO.,LTD
Addr.: No.158 Youhao Road , Youhao Mansion 1909, Dalian, China .
P.C.:116001
TEL:0086-411-82520129
FAX:0086-411-82520359
E-mail: info@reliable-cn.com

FOUNDRY
DALIAN RAINBOW FOUNDRY CO.,LTD
Addr.:No.51 Hebin North Road Jinpu New District,Jinzhou District,Dalian,China

DALIAN RELIABLE METAL CO.,LTD
Addr.:51 Hebin North Road Jinpu New District,Jinzhou District,Dalian,China

UPDATED 03/2024